Networking and Protocol Architectures

ITS323: Introduction to Data Communications

Sirindhorn International Institute of Technology
Thammasat University

Prepared by Steven Gordon on 24 October 2014
ITS323Y14S1L09, Steve/Courses/2014/s1/its323/lectures/networks.tex, r3386

Contents

Layering and Protocol Architectures

TCP/IP Protocol Architecture

Example of TCP/IP Operation

Data Communications Across a Link

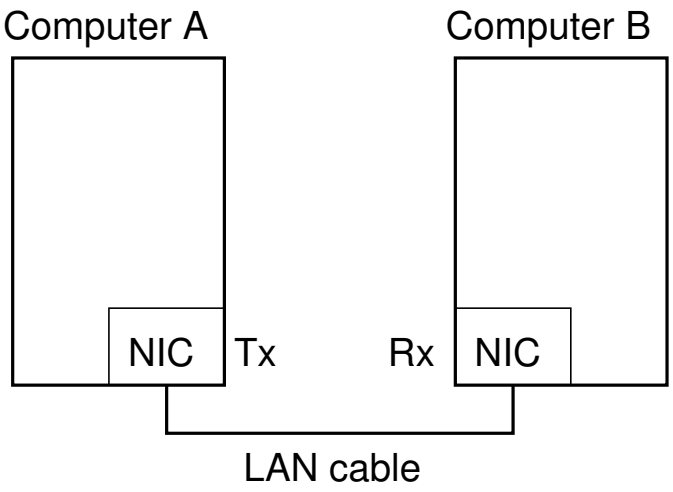

- Converting data (e.g. bits) into signals to be sent across the link (Physical layer)
- Ensuring link is ready for data transmission, reliable/efficient transmission of data (Data link layer)

Data Communications Across a Network

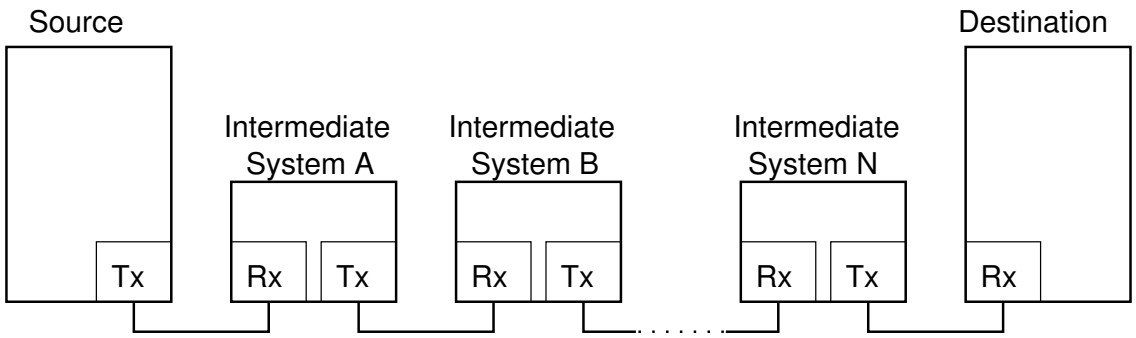

- Data traverses multiple links; each link may have its own Physical and Data Link layer protocols
- How do intermediate systems receive/send data? How to select which intermediate systems to send via? (Network layer)
- What happens if failures within intermediate systems? How to create applications without knowing the details of underlying network and technologies?

Layers

Divide-and-Conquer

- As data communications is complex, separate tasks into layers
- Design and implement protocols for each layer

Advantages

- Simplify design and implementation
- Change/upgrade protocols without modifying the whole system
- Select implementations from different vendors

Disadvantages

- Sub-optimal designs, overheads of each layer

General Layered Architecture

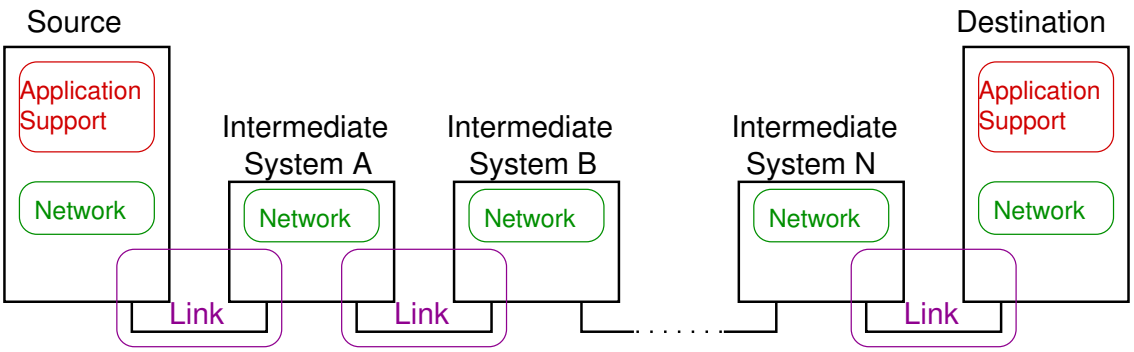

- Layers to support:
  - Communications across a link
  - Communications across a network
  - Applications to operate efficiently on end devices
- Different specific layered architectures have been developed
- Some are standards (e.g. OSI); others are loosely defined (e.g. Internet stack)

OSI 7-layer Protocol Architecture

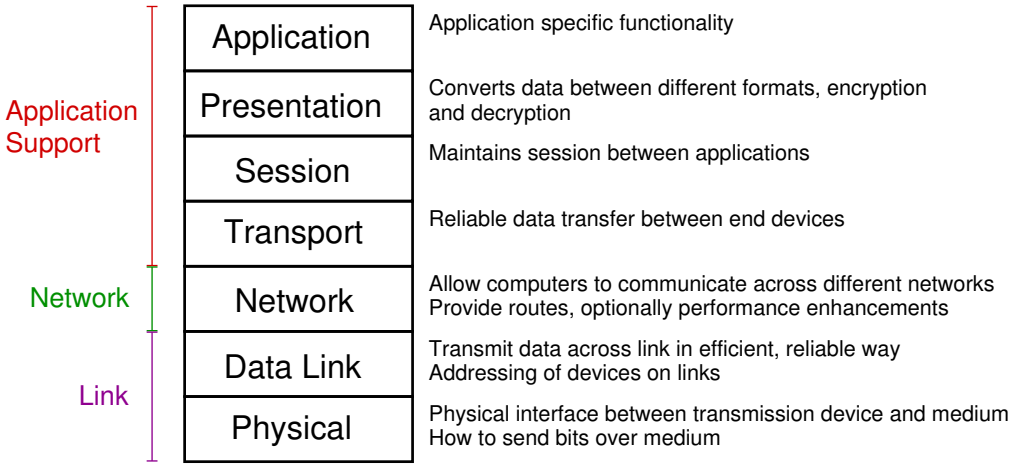

- ISO developed Open Systems Interconnection (ISO) in 1970's
- TCP/IP became more popular; but concepts and terminology still used today
- Others: IBM SNA, Appletalk, Novel IPX; SS7, UMTS, IEEE 802, . . .

Contents

Layering and Protocol Architectures

TCP/IP Protocol Architecture

Example of TCP/IP Operation

TCP/IP Protocol Architecture

- ARPANET used two key protocols, TCP and IP; together (as well as other related protocols) referred to as TCP/IP protocol suite
- Used in global Internet today
- Many protocol standardised by Internet Architecture Board (IAB) and Internet Engineering Task Force (IETF)
- No official protocol architecture; generally divided into 5 layers
- Different names: TCP/IP protocol architecture, TCP/IP protocol suite, Internet stack, ...

TCP/IP 5-layer Protocol Architecture

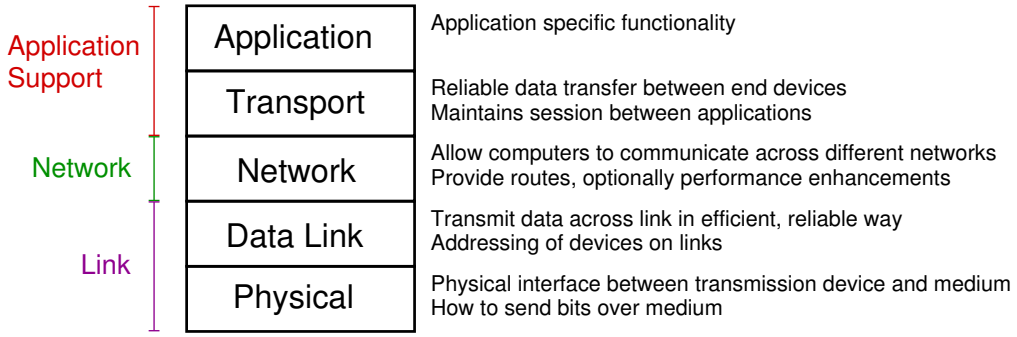

- There is no standard definition of the layers
- Sometimes have different names, and overlap between functionality

Layers and Devices

- One or more protocols are implemented in each layer in a device
- End devices (hosts) implement all layers in stack
- Intermediate devices usually do not implement all layers
- May refer to device by highest layer it implements, e.g. "layer 2 device"
  - Modems, amplifiers and repeaters are related to physical layer, layer 1 devices
  - Layer 2 switches, Ethernet switches, WiFi access points are layer 2 devices
  - Routers are layer 3 devices

Implementing Layers

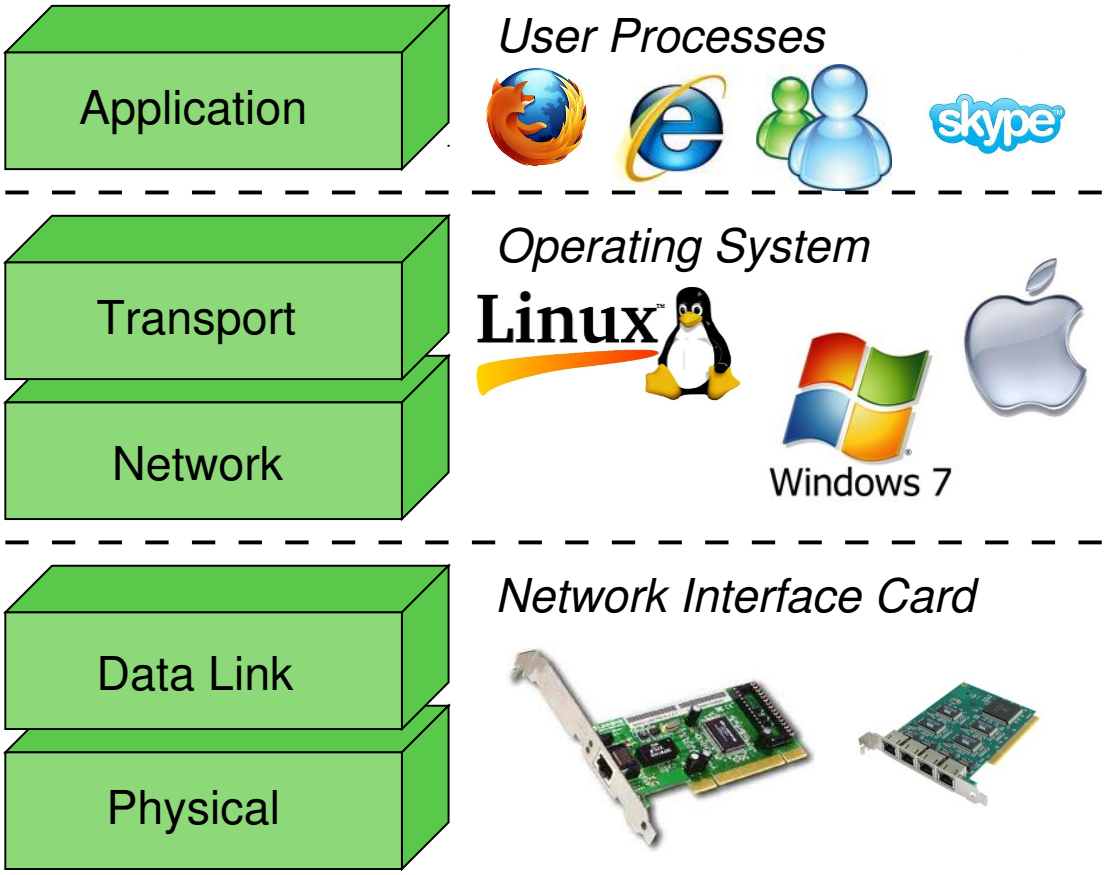

Contents

Layering and Protocol Architectures

TCP/IP Protocol Architecture

Example of TCP/IP Operation

Example Protocols in the TCP/IP

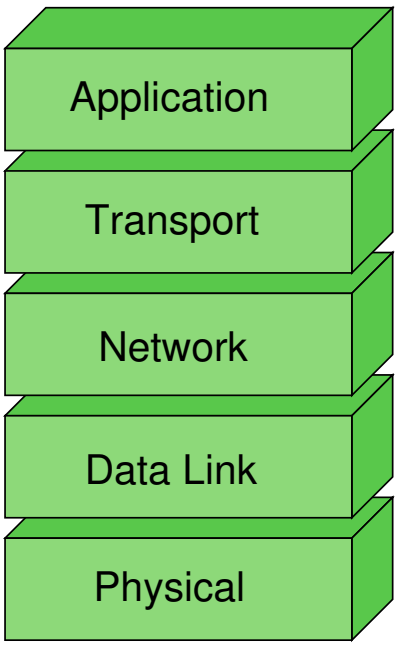

HTTP, FTP, SMTP, SSH

TCP, UDP SCTP, DCCP

IP ICMP, OSPF, ARP

Ethernet ATM Frame Relay

Wireless LAN SDH PDH

Twisted pair, optical fibre, satellite

Example Application: Web Browsing with HTTP

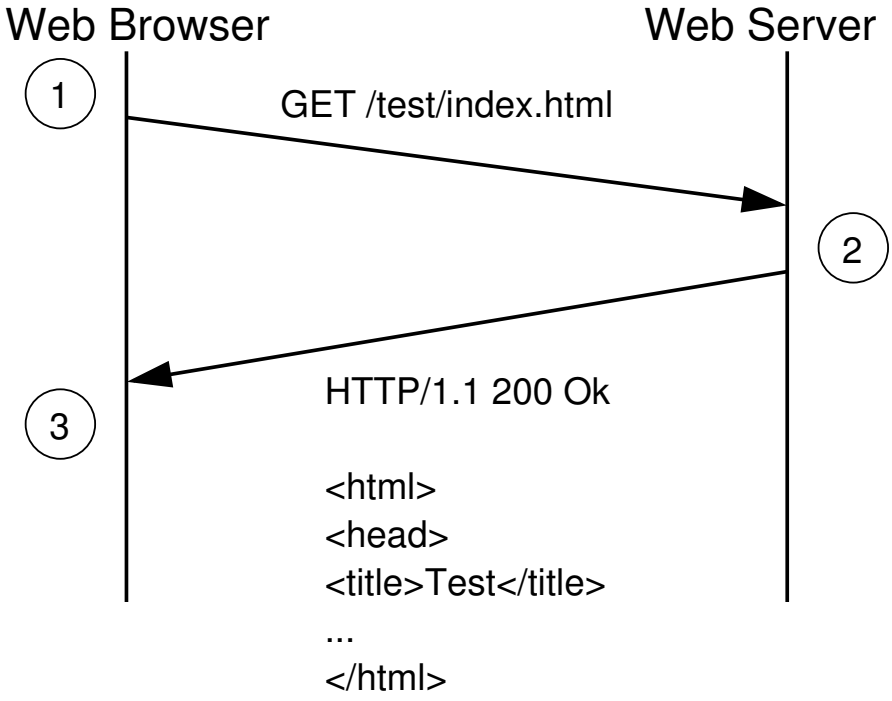

Encapsulation in TCP/IP
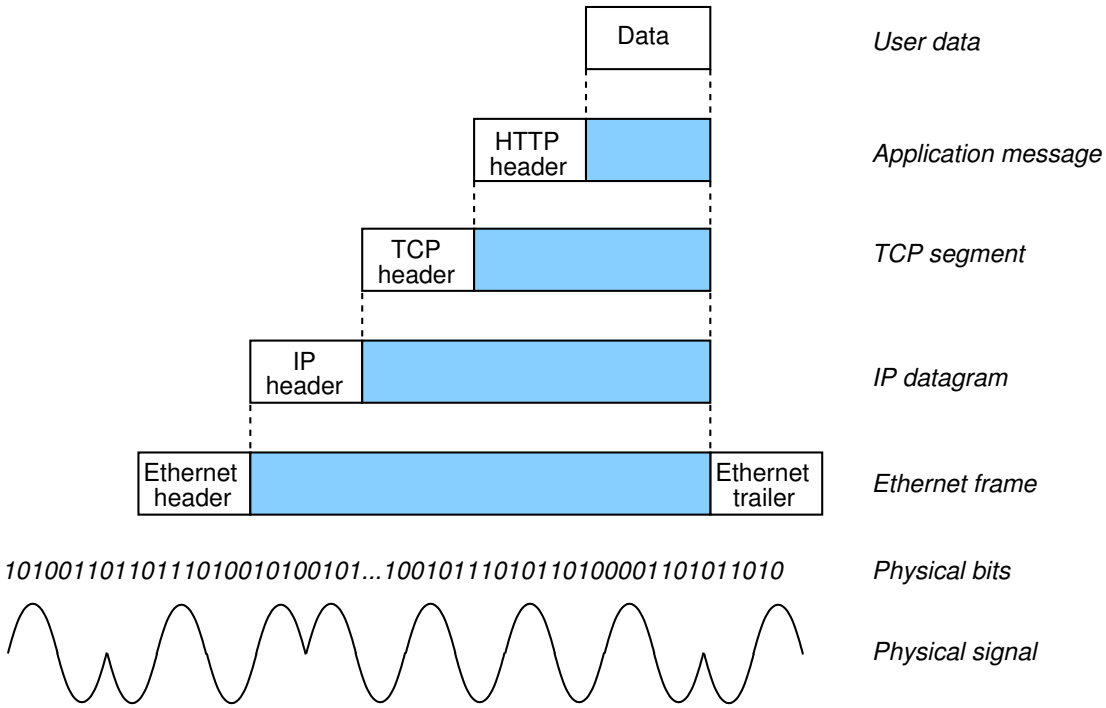
Example: web browser has requested web page from server; server needs to send the page requested back to browser